SB 10i

owner's manual (EN)

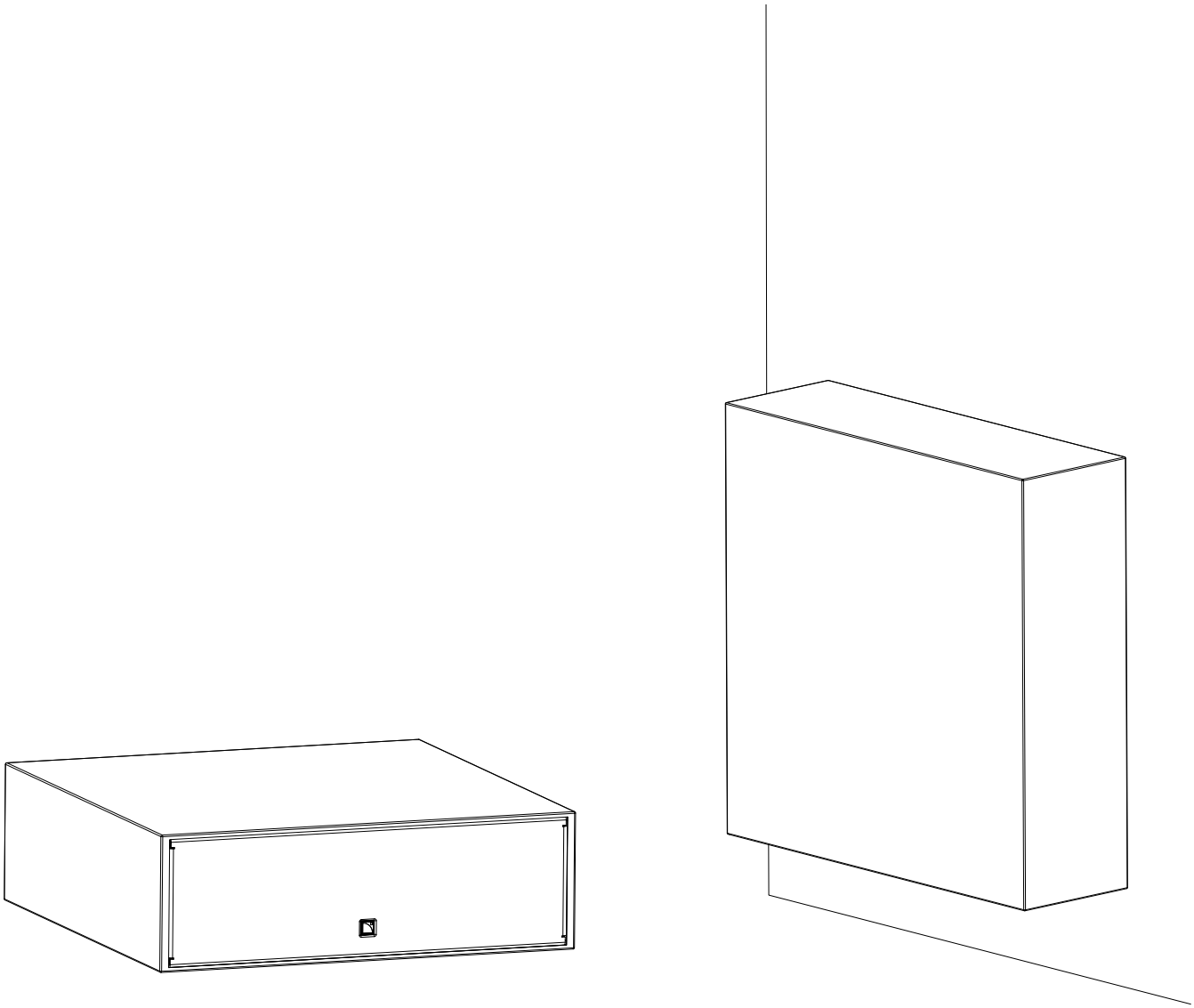

Document reference: SB10i owner's manual (EN) version 2.1
Distribution date: March 31, 2023
© 2023 L-Acoustics. All rights reserved.
No part of this publication may be reproduced or transmitted in any form or by any means without the express written consent of the publisher.

Contents

Safety....5
Instructions....5
Introduction....7
SB10i ultra-compact subwoofer....7
How to use this manual....7
Revision history....8
System components....9
Electro-acoustical description....11
Preset description....11
Connectors....11
Rigging system description....12
SB10i....12
Rigging elements....13
SB10i-onCW....13
Mechanical safety....14
Loudspeaker configurations....15
SB10i in standard configuration....15
Inspection and preventive maintenance....16
How to do preventive maintenance....16
Rigging part inspection....17
Mechanical system overview....17
Acoustical check....19
Rigging procedures....22
Tools....22
Wall- or ceiling-mounting SB10i with SB10i-onCW....22
Connection to LA amplified controllers....26
Cabling schemes for SB10i....26
Cabling SB10i....28
Corrective maintenance....31
Introduction....31
SB10i....32

Specifications..... 35
SB10i..... 35
SB10i-onCW..... 37
APPENDIX A: Recommendation for speaker cables..... 38
APPENDIX B: Specifications for custom rigging.....39

Safety

Instructions

Inspect the system before any deployment.

Perform safety related checks and inspections before any deployment.

Perform preventive maintenance at least once a year.

Refer to the preventive maintenance section for a list of actions and their periodicity.

Insufficient upkeep of the product can void the warranty.

If any safety issue is detected during inspection, do not use the product before performing corrective maintenance.

Check for issues. A rigging system part or fastener is missing or loose. A rigging system part exhibits: bends, breaks, broken parts, corrosion, cracks, cracks in welded joints, deformation, denting, wear, holes. A safety cue or label is missing.

Never incorporate equipment or accessories not approved by L-Acoustics.

Read all the related PRODUCT INFORMATION documents shipped with the products before exploiting the system.

Do not store the product on an unstable cart, stand, tripod, bracket, or table.

Beware of sound levels.

Do not stay within close proximity of loudspeakers in operation.

Loudspeaker systems are capable of producing very high sound pressure levels (SPL) which can instantaneously lead to permanent hearing damage to performers, production crew and audience members. Hearing damage can also occur at moderate level with prolonged exposure to sound.

Check the applicable laws and regulations relating to maximum sound levels and exposure times.

Work with qualified personnel for rigging the system.

Installation should only be carried out by qualified personnel that are familiar with the rigging techniques and safety recommendations outlined in this manual.

Ensure personnel health and safety.

During installation and set-up personnel must wear protective headgear and footwear at all times. Under no circumstances is personnel allowed to climb on a loudspeaker assembly.

Respect the Working Load Limit (WLL) of third party equipment.

L-Acoustics is not responsible for any rigging equipment and accessories provided by third party manufacturers.

Verify that the Working Load Limit (WLL) of the suspension points, chain hoists and all additional hardware rigging accessories is respected.

Respect the maximum configurations and the recommended safety precautions.

For safety issue, respect the maximum configurations outlined in this manual. To check the conformity of any configuration in regards with the safety precautions recommended by L-Acoustics, model the system in Soundvision and refer to the warnings in Mechanical Data section.

Be cautious when flying a loudspeaker configuration.

Before installing/raising the product, check each individual element to make sure that it is securely fastened to the adjacent element. Always verify that no one is standing underneath the product when it is being installed/raised. Never leave the product unattended during the installation process.

As a general rule, L-Acoustics recommends the use of secondary safety at all times.

Be cautious when ground-stacking a loudspeaker array.

Do not stack the loudspeaker array on unstable ground or surface. If the array is stacked on a structure, platform, or stage, always check that the latter can support the total weight of the array.

As a general rule, L-Acoustics recommends the use of safety straps at all times.

Risk of falling objects

Verify that no unattached items remain on the product or assembly.

Risk of tipping

Remove all rigging accessories before transporting a product or an assembly.

Take into account the wind effects on dynamic load.

When a loudspeaker assembly is deployed in an open air environment, wind can produce dynamic stress to the rigging components and suspension points.

If the wind force exceeds 6 bft (Beaufort scale), lower down and/or secure the product or the assembly.

Intended use

This system is intended for use by trained personnel for professional applications.

As part of a continuous evolution of techniques and standards, L-Acoustics reserves the right to change the specifications of its products and the content of its documents without prior notice.

Check www.l-acoustics.com on a regular basis to download the latest document and software updates.

Long term exposure to extreme conditions may damage the product.

For more information, refer to the **Products weather protection** document, available on the website.

Read the maintenance section of this document before servicing the product.

Contact L-Acoustics for advanced maintenance.

Any unauthorized maintenance operation will void the product warranty.

This marking indicates that this product should not be disposed of with other household waste throughout the EU. To prevent possible harm to the environment or human health from uncontrolled waste disposal, recycle it responsibly to promote the sustainable reuse of material resources. To return your used device, please use the return and collection systems or contact the retailer where the product was purchased. They can take this product for environmentally safe recycling.

Introduction

SB10i ultra-compact subwoofer

SB10i is an ultra-compact subwoofer designed to extend the bandwidth of small format point sources or colinear sources in installation applications requiring discretion and elegance. SB10i features one direct-radiating 10" transducer mounted in a bass-reflex tuned enclosure. Its slim profile enables on-wall and on-ceiling mounting but also in-wall and in-ceiling integration, making it ideal for residential, commercial, luxury and hospitality spaces, museums, and more.

SB10i provides low-frequency content down to 25 Hz and an output of 119 dB Max SPL when separated from the main loudspeakers, and using the 60 Hz preset. In coupled configurations, SB10i can be driven by two presets, 100 Hz and 200 Hz, providing 122 dB and 124 dB of Max SPL respectively.

Like the largest concert-grade subwoofers, SB10i features L-Vents laminar vents that substantially reduce turbulence and port noise at high levels while also increasing LF efficiency.

How to use this manual

The SB10i owner's manual is intended for all actors involved in the system design, implementation, preventive and corrective maintenance of the SB10i system. It must be used as follows:

1. Read the technical description for an overview of all system elements, their features, and their compatibilities.
   - Electro-acoustical description (p.11)
   - Rigging system description (p.12)
2. Prepare the system configuration. Consider the mechanical limits and the available acoustical configurations.
   - Mechanical safety (p.14)
   - Loudspeaker configurations (p.15)
3. To deploy the system, refer to the cabling instructions.
   - Connection to LA amplified controllers (p.26)

The Corrective maintenance (p.31) section contains the operations authorized for the end user.
Performing another operation exposes to hazardous situations.
For advanced maintenance, contact your L-Acoustics representative.

As part of a continuous evolution of techniques and standards, L-Acoustics reserves the right to change the specifications of its products and the content of its document without prior notice. Please check www.l-acoustics.com on a regular basis to download the latest document and software updates.

Contact information

For information on advanced corrective maintenance:

- contact your Certified Provider or your L-Acoustics representative
- for Certified Providers, contact the L-Acoustics customer service: customer.service@l-acoustics.com (EMEA/APAC), laus.service@l-acoustics.com (Americas).

Symbols

The following symbols are used in this document:

This symbol indicates a potential risk of harm to an individual or damage to the product.
It can also notify the user about instructions that must be strictly followed to ensure safe installation or operation of the product.

This symbol notifies the user about instructions that must be strictly followed to ensure proper installation or operation of the product.

This symbol notifies the user about complementary information or optional instructions.

Revision history

version number	publication date	modification
1.0	Mar. 2022	Initial version.
2.0	Nov. 2022	Added new SB10i-onCW rigging accessory.
2.1	Mar. 2023	Added preset [SB10_60].

System components

Loudspeaker enclosures

SB10i	Ultra-compact subwoofer: 1 × 10" (installation version)

Powering and driving system

LA2Xi / LA4X / LA7.16i / LA12X	Amplified controller with DSP, preset library and networking capabilities

Refer to the LA2Xi / LA4X / LA7.16i / LA12X owner's manual for operating instructions.

Cables

2 × 2.5 mm² cable	speaker cable with bare wire endings Adapt the cable length to the installation.
custom 2-point speakON cable	2-point speakON cable (2.5 mm² gauge) to bare wire cable This cable needs to be custom made.

Information about the connection of the enclosures to the LA amplified controllers is given in this document.
Refer to the LA2Xi / LA4X / LA7.16i / LA12X owner's manual for detailed instructions about the whole cabling scheme, including modulation cables and network.

Rigging elements

SB10i-onCW	On-wall or on-ceiling mounting accessory with silent blocks for SB10i

Software applications

Soundvision	3D acoustical and mechanical modeling software
LA Network Manager	Software for remote control and monitoring of amplified controllers

Refer to the **Soundvision** help.
Refer to the **LA Network Manager** help.

System component illustrations

Cables

2 × 2.5 mm² cable

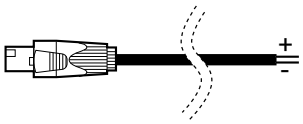

custom 2-point speakON cable

Rigging accessories

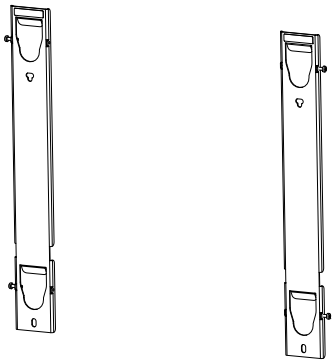

SB10i-onCW

Software applications

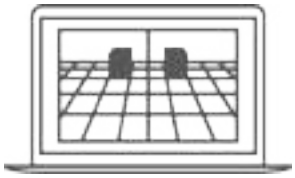

Soundvision

LA Network Manager

Electro-acoustical description

Preset description

[SB10_60] [SB10_100] [SB10_200]

outputs	channels	routing	gain	delay	polarity	mute
OUT 1	SB	IN A	0 dB	0 ms	+	ON
OUT 2	SB	IN A	0 dB	0 ms	+	ON
OUT 3	SB	IN A	0 dB	0 ms	+	ON
OUT 4	SB	IN A	0 dB	0 ms	+	ON

Connectors

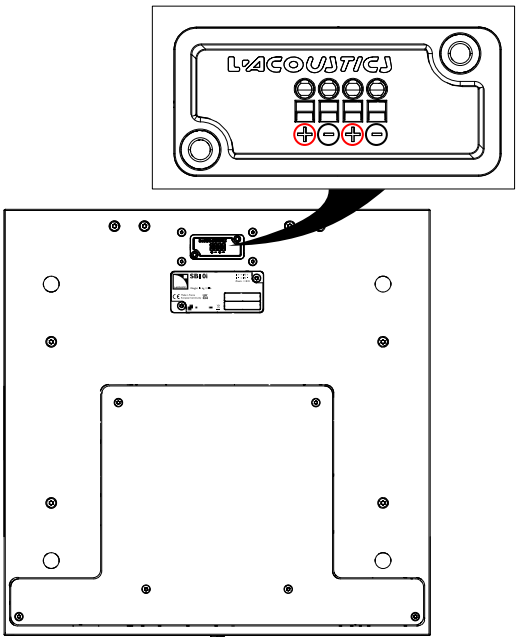

SB10i

1 × 4-point terminal block with push-in connection

Internal pinout for L-Acoustics subwoofers

Terminal block points	IN +	IN -
Transducer connectors	LF +	LF -

Rigging system description

SB10i

Four removable runners are provided for ground-stacking SB10i. Remove the placeholder screws and tighten the runners by hand.

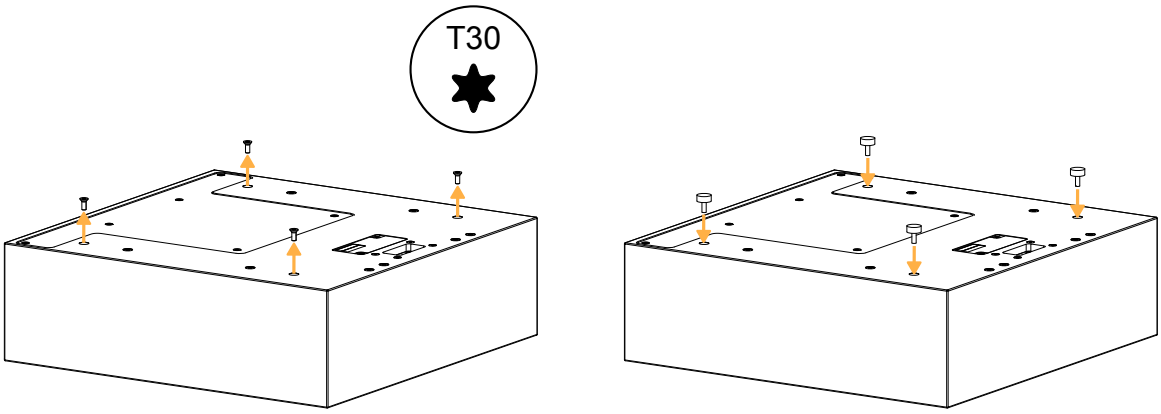

SB10i can be mounted on a wall or a ceiling with dedicated rigging accessories using the inserts on the bottom.

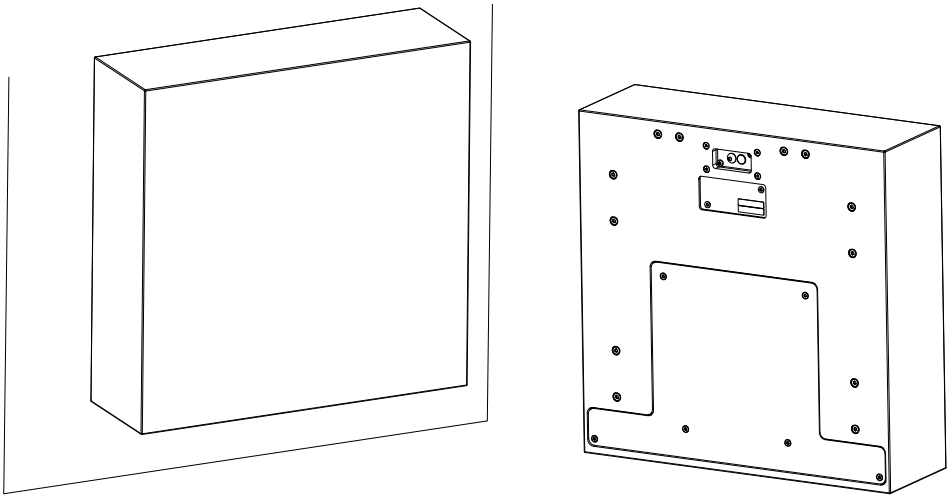

Risk of acoustic leaks
Always put the placeholder screws back when the inserts are not used.

The logo on the front face can be rotated to adapt to every configuration.

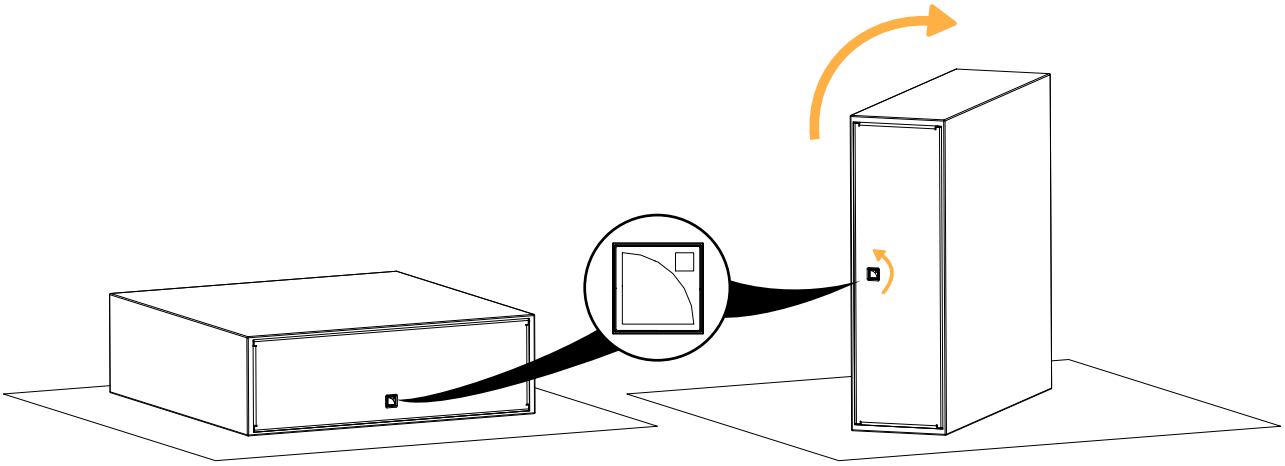

Rigging elements

SB10i-onCW

SB10i-onCW is a rigging interface for mounting one SB10i on a wall or on a ceiling. It is composed of:

- two surface-mounting plates
- four silent blocks
- fasteners for assembly and safety

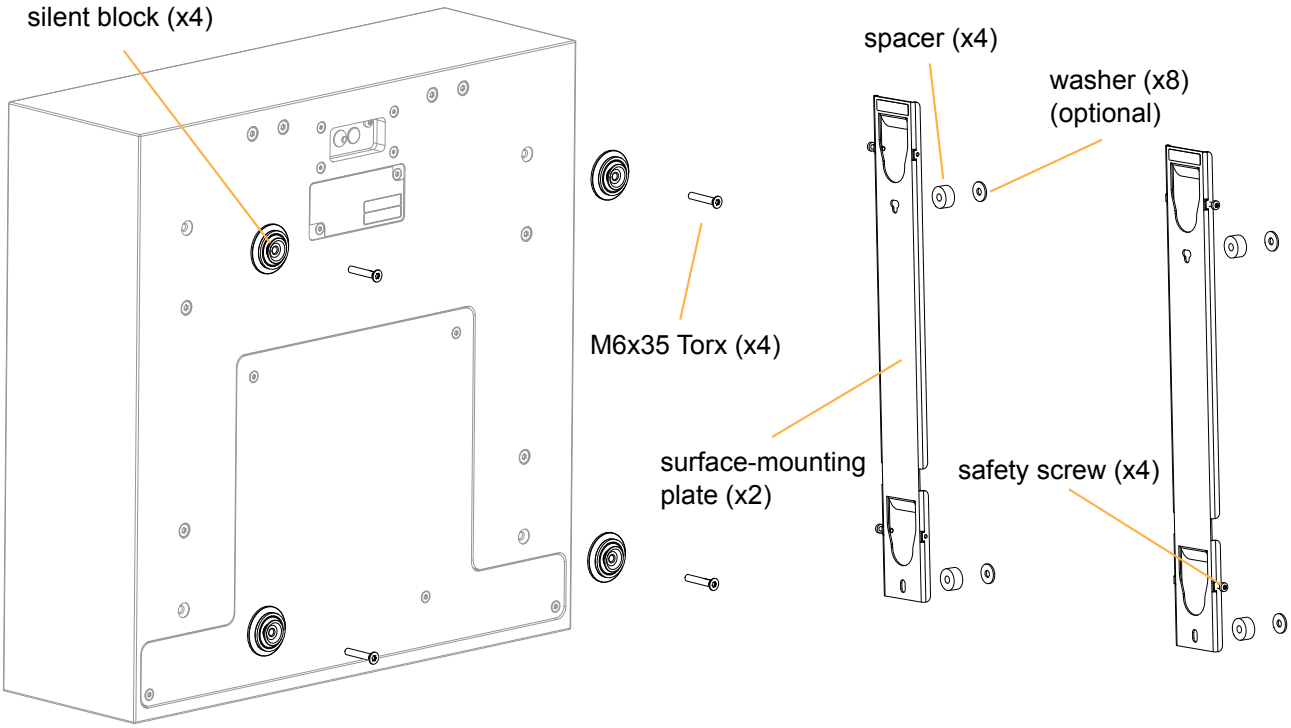

Fasteners for wall-mounting or ceiling-mounting

Secure the rigging element with four M6 screws.

Select screw length and anchors applicable to the wall or ceiling properties.

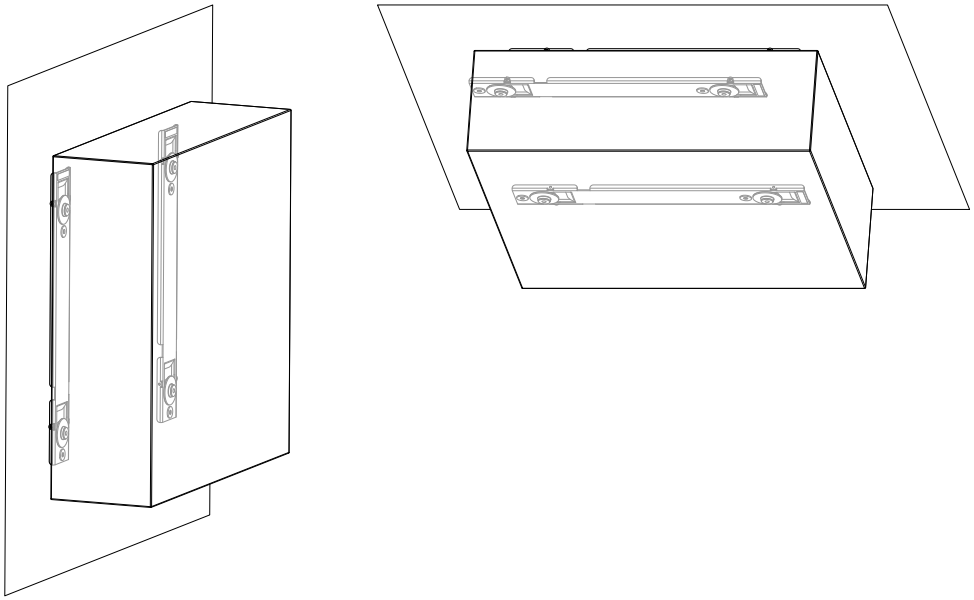

Mechanical safety

Flown configurations

The SB10i rigging system complies with EN 62368-1: 2014 Audio/video, information and communication technology equipment — Part 1: Safety requirements.

The deployments described in this manual achieve a safety factor of **5**.

SB10i

configuration	rigging accessory	safe/maximum limit
wall-mounted or ceiling-mounted	SB10i-onCW	1

Other configurations

For other configurations, respect the recommended maximum limit for optimal stability.

Be cautious when ground-stacking a loudspeaker array.

Do not stack the loudspeaker array on unstable ground or surface. If the array is stacked on a structure, platform, or stage, always check that the latter can support the total weight of the array.

As a general rule, L-Acoustics recommends the use of safety straps at all times.

SB10i

configuration	rigging accessory	safe/maximum limit
ground-stacked	No rigging accessory	2
stacked upright	No rigging accessory	1

Loudspeaker configurations

SB10i in standard configuration

Deployed in a standard configuration, an SB10i system operates with an omnidirectional directivity pattern over the nominal bandwidth of the SB10i enclosure.

The [SB10_60], [SB10_100], and [SB10_200] factory presets provide the subwoofer system with an upper frequency limit at 60 Hz, 100 Hz, and 200 Hz respectively, in order to optimize the acoustic coupling with a main full-range system.

The SB10i subwoofer is driven by the LA2Xi / LA4X / LA7.16i / LA12X amplified controllers.

Reduced maximum SPL or drive capacity with LA2Xi: refer to the **LA2Xi owner's manual**.

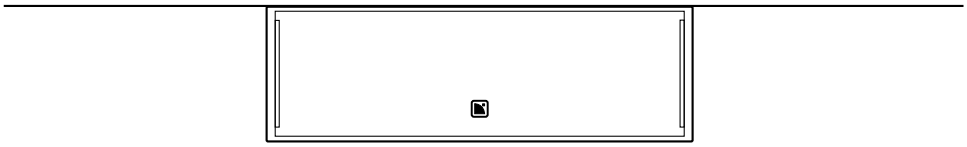

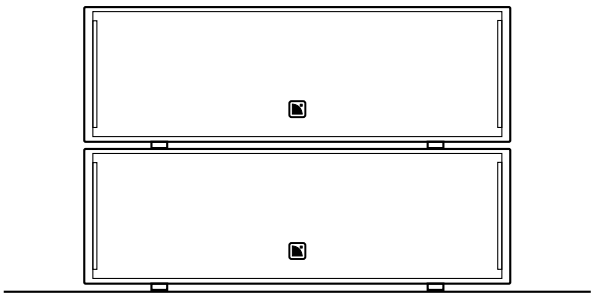

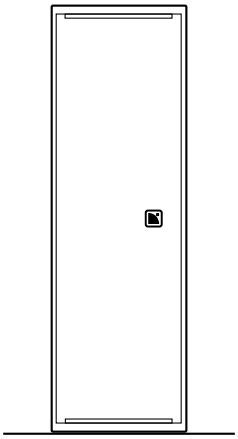

Preset	[SB10_60]	[SB10_100]	[SB10_200]
Low frequency limit (-10 dB)	25 Hz	27 Hz	29 Hz

Delay values

When combining a line source with subwoofers, delays may have to be added to the presets.

Refer to the Preset Guide to obtain the pre-alignment delay values.

Inspection and preventive maintenance

How to do preventive maintenance

Inspect the system after any corrective maintenance operation.

Perform preventive maintenance at least once a year.

Rigging and hardware

Perform the Rigging part inspection (p.17) on each rigging part.

Use the Mechanical system overview (p.17) to identify critical parts of the system.

If any parts are damaged, contact your L-Acoustics representative for further instructions.

Acoustics

Perform the Enclosure check (p.19).

Perform the Listening test (p.21) to detect any degradation in sound quality.

If necessary, refer to the Corrective maintenance (p.31) section for speaker repair kits and maintenance instructions.

Rigging part inspection

About this task

The term "rigging part" comprises:

- lifting accessories such as clamps and shackles
- rigging accessories such as rigging frames, rigging interfaces, and brackets
- fasteners used for assembling two products together such as ball-locking pins, rigging axes, and safety pins
- rigging plates mounted on enclosures and their rigging screws
- screens mounted on enclosures

This inspection procedure covers only L-Acoustics products. To inspect other products that are part of the lifting chain, refer to the manufacturer's instructions.

Prerequisite

Perform the inspection in a well-lit environment.

Procedure

1. Check that the rigging part is present.
2. Check for:
   - corrosion
   - wear and cracks
   - bends and dents
   - holes
   - missing safety cues
   - missing identification labels
   - missing or loose fasteners

   Replacing screws
   If a screw is loose, remove and replace it.
   Always use the new screws provided in the repair kit.
   If no new screw is available, add blue threadlocker before reusing the screw.
   Do not apply more than the indicated torque.
3. Check the geometry of the part to identify critical deformations.

What to do next

If a problem is detected, perform the authorized maintenance operations or contact your L-Acoustics representative.

Mechanical system overview

Critical parts of the lifting chains are highlighted.

The indicates a visual inspection.

Perform the Rigging part inspection (p.17) on critical parts.

Replacing screws
If a screw is loose, remove and replace it.
Always use the new screws provided in the repair kit.
If no new screw is available, add blue threadlocker before reusing the screw.
Do not apply more than the indicated torque.

SB10i mounted on a wall or ceiling with SB10i-onCW

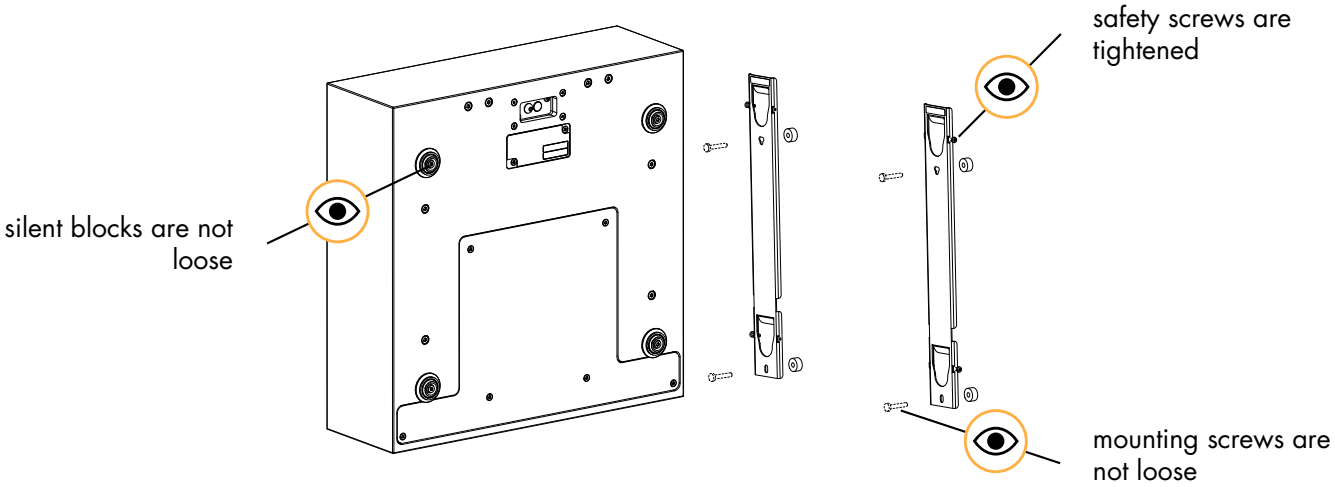

Acoustical check

Enclosure check

This feature is available on:
LA4X
LA12X

ENCLOSURE CHECK measures impedance at the reference frequencies for the connected loudspeaker family. The measured impedance is compared to the expected range allowing for fast detection of loudspeakers presenting circuit continuity issues.

The results can be used for preliminary diagnosis but cannot replace a comprehensive quality control.

Prerequisite

ENCLOSURE CHECK measurements can only be reliable if the following requirements are met:

Environment and temperature:
- Ambient temperature must be comprised between 0 °C / 32 °F and 40 °C / 104 °F. Ideal temperature is 20 °C / 68 °F.
- Enclosures must be at room temperature. If warm from a recent high level use or recently moved from a cold environment, let the loudspeakers reach room temperature before starting.

Enclosures:
- Enclosures must be included in the embedded factory preset library.
- Enclosures must be in nominal operating conditions:
  - Remove covers or dollies obstructing the loudspeakers or the vents.
  - Check for obvious physical damage or air leak: visually inspect the grill, gasket, cabinet, and connector plate for loose, missing or damaged parts.

Connection:
- Use only 10 m / 30 ft 4 mm² / AWG 11 speaker cables.
- Do not connect enclosures in parallel.

Amplified controllers:
- LA4X must run at least firmware version 1.1.0.
- LA4X load sensors must be calibrated. Refer to the **Load Sensor Calibration Tool** technical bulletin for more information.
- LA4X must warm up for at least 10 minutes after power up. Do not power off, reboot or switch to standby mode to avoid resetting the countdown.
- Load a preset corresponding to the connected loudspeaker's family. Presets from the user memories may be used on condition they are made of presets supported in the embedded factory preset library.

Procedure

1. Power up the amplified controller. Let LA4X warm up for at least 10 minutes.
2. Connect the loudspeaker enclosures to the amplified controller.
3. Load a preset from or built from the embedded library corresponding to the connected loudspeaker family.
4. On the amplified controller, use the encoder wheel to select **MONITORING & INFO**. Press the OK key or the encoder wheel to validate.
5. Use the encoder wheel to select **ENCLOSURE CHECK**.

   Beware of sound levels.
   Although the sound pressure levels generated for the ENCLOSURE CHECK are moderate, do not stay within close proximity of the loudspeakers and consider wearing ear protection.
6. Press the OK key or the encoder wheel to launch the ENCLOSURE CHECK.

   The amplified controller generates short sinusoidal signals simultaneously for each connected output.

   The amplified controller displays the results for each output.

7. Depending on the displayed results, follow the instructions in the table.

result	interpretation	instructions
OK	measured impedance is within expected range	enclosure is in working order electrically
?	unsupported preset family	only supported enclosures should be tested
NC	Not Connected	if cables are connected: **a.** inspect the cables and connections **b.** go to step 8 (p.20)
NOK	measured impedance is not within expected range	**a.** check that all the prerequisites are met, in particular that the loaded preset corresponds to the connected speaker's family **b.** inspect the cables and connections **c.** go to step 8 (p.20)
UNDEF	measured impedance is undefined	

8. Under NC, NOK and UNDEF results, press and hold the corresponding OUT key.

The amplified controller displays:

- the tested frequencies,
- information on the measured impedance:
  - OPEN for open circuit (found in NC results),
  - SHORT for short circuit (found in NOK results), or
  - a percentage of variation from the expected range (found in NOK and UNDEF results)
- the number of operational transducers out of the total

Low variations from the expected range are acceptable: displayed percentage can be different from 0 and all transducers considered operational.

Listening test

enclosure	preset	usable bandwidth
SB10i	[SB10_100]	27 Hz - 118 Hz

Procedure

1. Load the preset on an LA2Xi / LA4X / LA7.16i / LA12X amplified controller.
2. Connect a sinus generator to the amplified controller.

   Risk of hearing damage
   Set a low sound level to start and use ear protection to adjust before testing.
3. Scan the bandwidth focusing on the usable range.
   The sound should remain pure and free of unwanted noise.
4. Focus on the 25 Hz frequency.
   The sound should remain pure and free of unwanted noise.

Troubleshooting for LF speakers

One or more LF speaker produces distorted, buzzing, rubbing, clicking, muffled or weak sound.

Possible causes

- The screws are not tightened with the appropriate torque.
- There is an air leak in the gasket.
- There is dust on the cone.
- The cone is damaged.
- The surround is torn or delaminated.
- The voice coil or the spider is damaged.

Procedure

1. Perform the speaker disassembly procedure.
2. Visually inspect the cables and the connectors.
3. Visually inspect the speaker cone, the voice coil and the spider.

   If any damage is visible, replace the speaker.
4. Carefully clean the speaker with a dry cloth.
5. Perform the reassembly procedure.
   Replace the speaker gasket and the screws.
   Apply the recommended torque.
6. Repeat the listening test.

   If the problem persists, replace the speaker.

Troubleshooting for installation enclosures

One or more enclosure produces a high-pitched, leaking air sound.

Possible cause

- Placeholder screws are missing.

Procedure

Visually inspect the screws on both sides of the enclosures.
Secure placeholder screws in the empty inserts.

Rigging procedures

Tools

Before rigging this product, make sure all the tools listed are available. References are given for FACOM® products in this table. Other manufacturers can be used.

name	reference	distributor
set of 6-point 1/4" sockets	RL.NANO1 / R.360NANO	FACOM
torque screwdriver (2 - 10 N.m)	A.404	FACOM

Wall- or ceiling-mounting SB10i with SB10i-onCW

type of deployment	wall-mounting
	ceiling-mounting
rigging accessories	SB10i-onCW, including: • surface-mounting plates • 4 M6×35 Torx screws • 4 silent blocks • 4 spacers • 8 washers
additional material	4 compatible screws and anchors
tools	torque screwdriver
	T30 Torx bit
	T20 Torx bit
min. number of operators	1

Fasteners for wall-mounting or ceiling-mounting

Secure the rigging element with four round or pan head M6 screws.

Select screw length and anchors applicable to the wall or ceiling properties.

Assembly

Procedure

The cardboard packaging of the rigging element can be used as a drilling template.

1. Prepare the wall or ceiling for drilling.

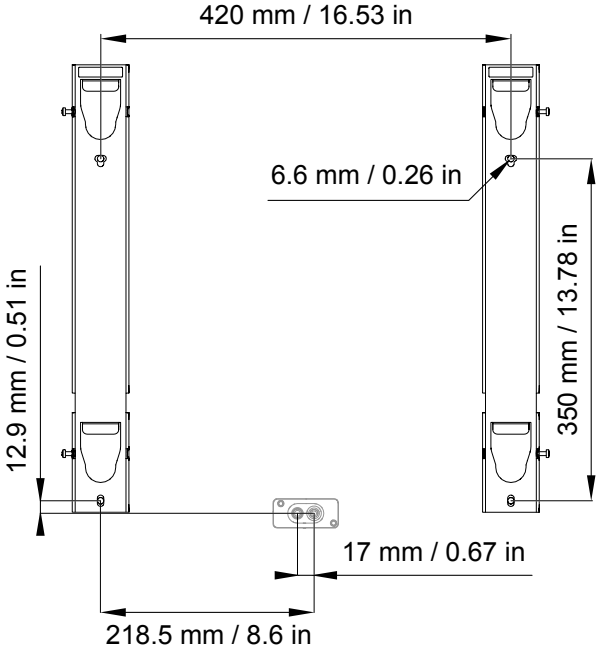

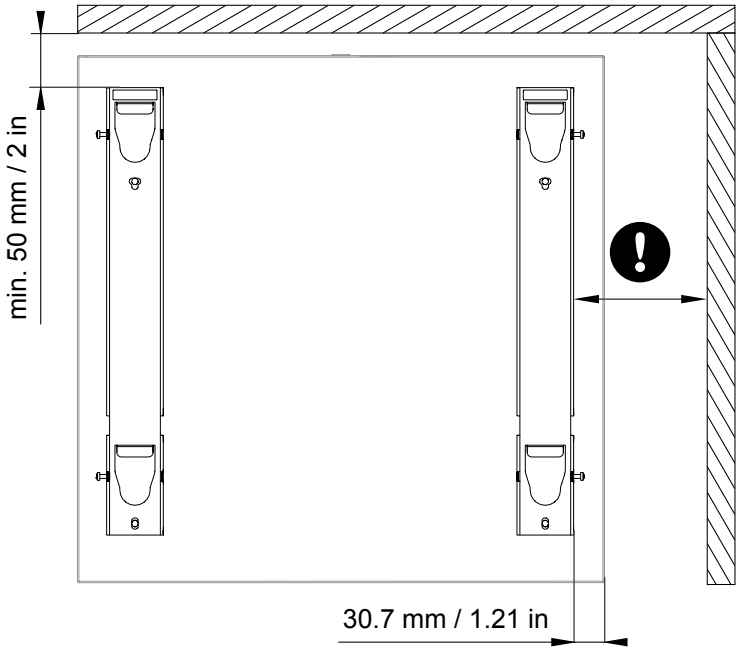

Make sure to leave enough space between the wall or ceiling and the sides of the rigging element to access the security screws when the enclosure is mounted.

2. Secure the surface-mounting plate on the wall or on the ceiling, using the four spacers.

   The washers can be added behind the spacers if the wall or ceiling is not perfectly flat.

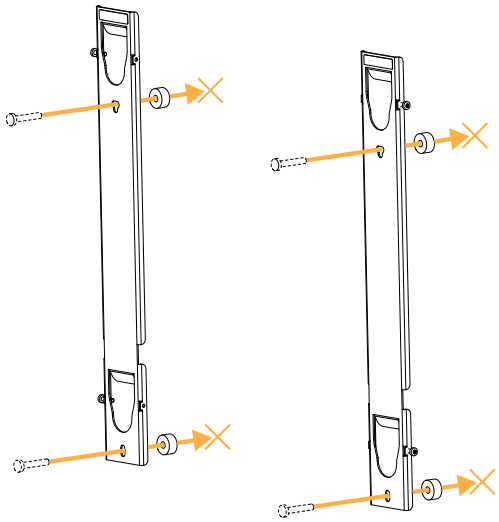

3. Remove the four placeholder screws from the bottom of SB10i.

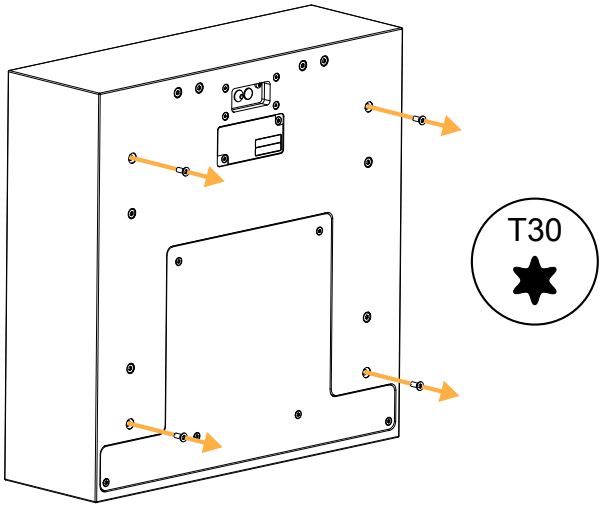

4. Mount the silent blocks to SB10i with the four M6×35 Torx screws.

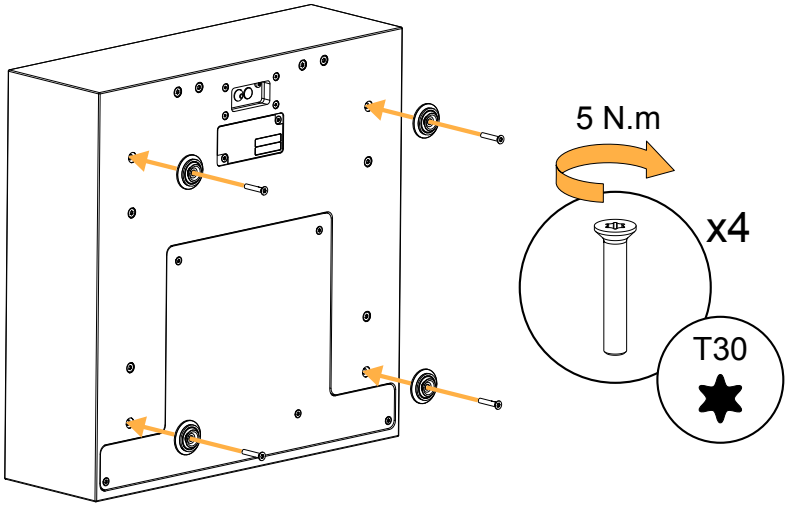

5. Prepare the cabling. Refer to Cabling SB10i (p.28).

6. Mount the assembly on the surface-mounting plates, with the front of the enclosure facing down.

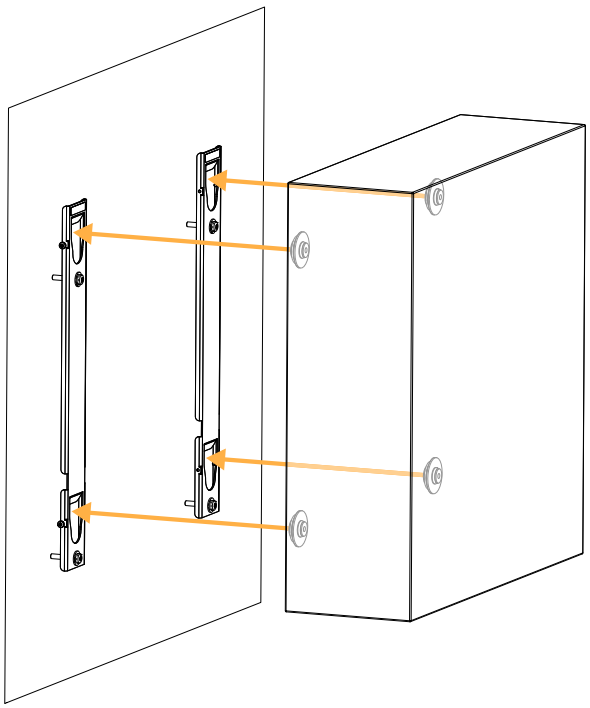

7. Slide towards the bottom of SB10i to secure the assembly.

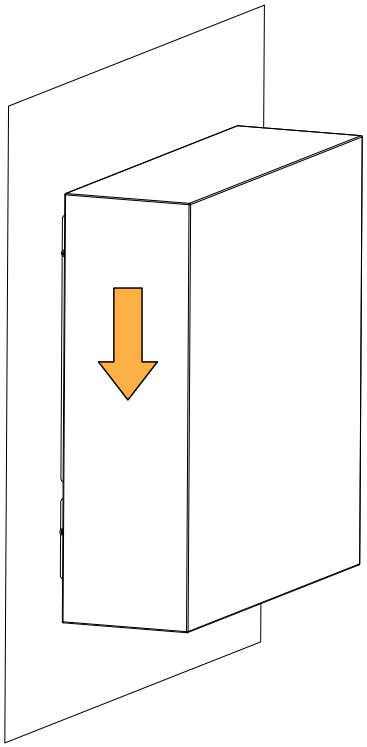

8. Tighten the four safety screws and make sure the assembly is stable.

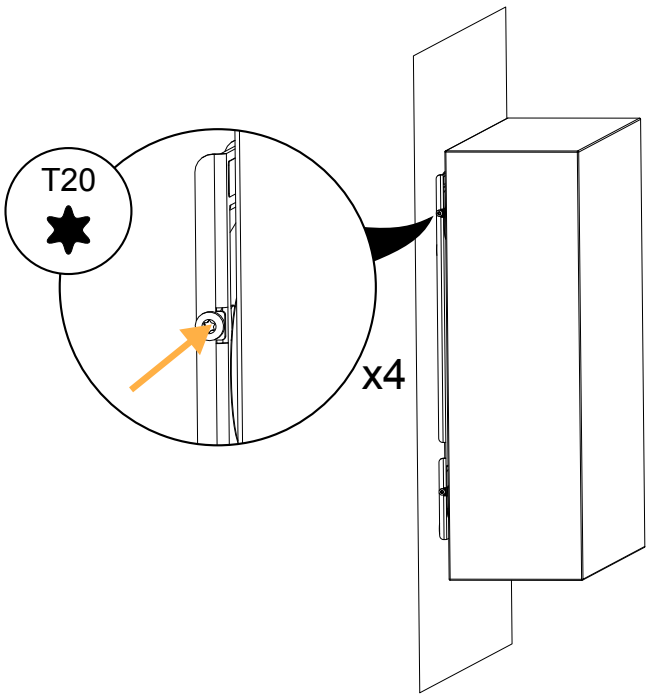

Connection to LA amplified controllers

Refer to the **Amplification reference** technical bulletin for the latest information on compatibility with amplified controllers and cabling schemes for all enclosure types.

Enclosure drive capacity per amplified controller

Make sure the total number of connected enclosures does not exceed the maximum number of enclosures per controller (refer to the footnotes).

	LA2Xi	LA4X	LA7.16i	LA12X
	per output */ total	**per output */ total**	**per output */ total**	**per output */ total**
SB10i	2 / 8 (SE), 1 / 2 (BTL)	2 / 8	2 / 32	3 / 12

Reduced maximum SPL or drive capacity with LA2Xi: refer to the **LA2Xi owner's manual**.

Cabling schemes for SB10i

Refer to the cabling schemes to connect the enclosures to different types of output configurations.

Refer to the cable manufacturer documentation for the wire color code.

Refer to the **LA2Xi owner's manual** for more information on output configurations.

Terminal block output (LA2Xi SE / LA7.16i)

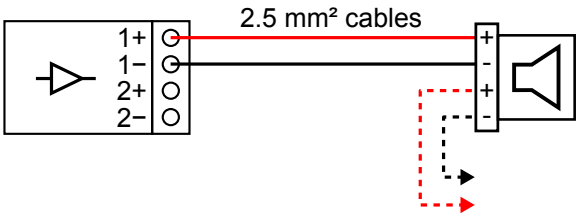

Terminal block output (LA2Xi BTL)

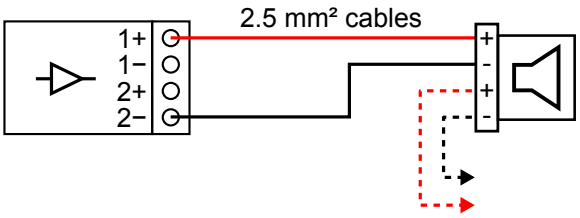

* For passive loudspeakers, the value corresponds to the number of enclosures in parallel on the output. For active loudspeakers, the value corresponds to the number of sections in parallel on the output.

One-channel speakON output

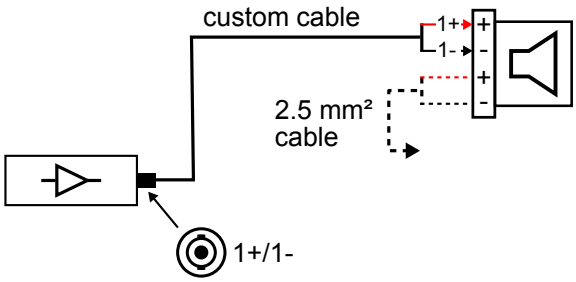

Two-channel speakON output

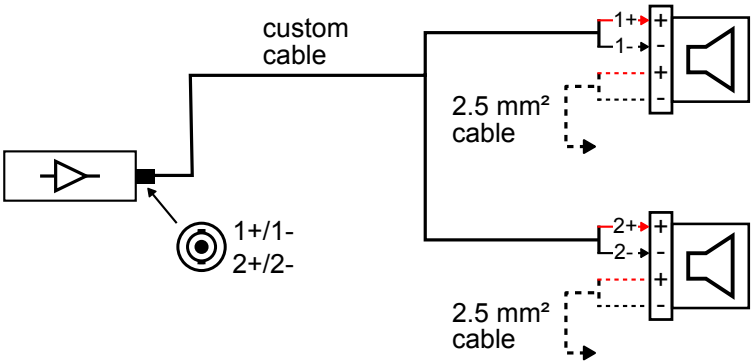

Cabling SB10i

Accessory	connector sealing plate (provided)
Screws and fasteners	2 M5×10 screws (provided)
Tools	torque screwdriver
	T25 Torx bit
	small tool or flat screwdriver (3 mm or less)
Min number of operators	1

Assembly

Prerequisite

The cable glands on the connector sealing plate are compatible with cables up to 2 × 2.5 mm² gauge.

Refer to:

- APPENDIX A: Recommendation for speaker cables (p.38)
- Cabling schemes for SB10i (p.26)

About this task

The connector sealing plate has two holes: one for the input cable and one for the cable connecting to the next enclosure in parallel. By default, the first hole is fitted with a cable gland and the second one with a protective plug. An extra cable gland is provided with each enclosure.

This procedure describes how to connect the input cable to the enclosure. If the enclosure must be connected in parallel, replace the protective plug with the extra cable gland and proceed identically for both cables.

Procedure

1. Insert the cable through the cable gland.

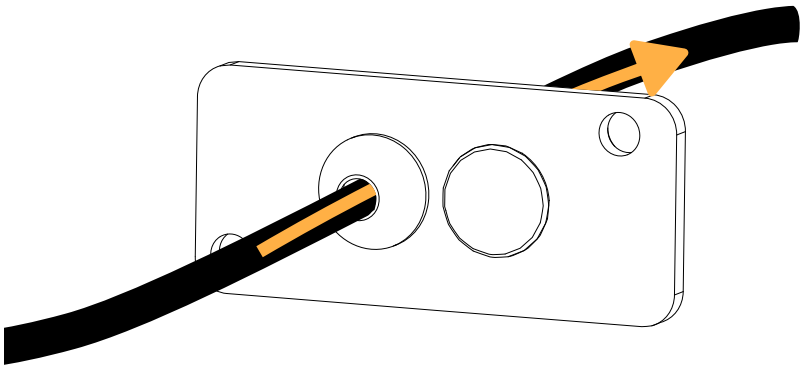

2. Strip the wires of the cable.

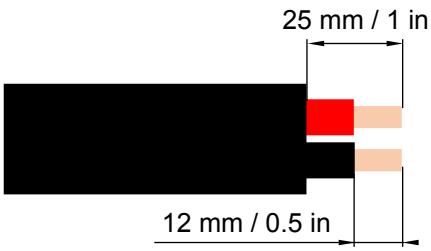

2 × 2.5 mm² cable

Refer to the cable manufacturer documentation for the wire color code.

3. Push the wires into the terminals.

If necessary, use a small tool in the hole on the bottom of the terminal to unlock it.

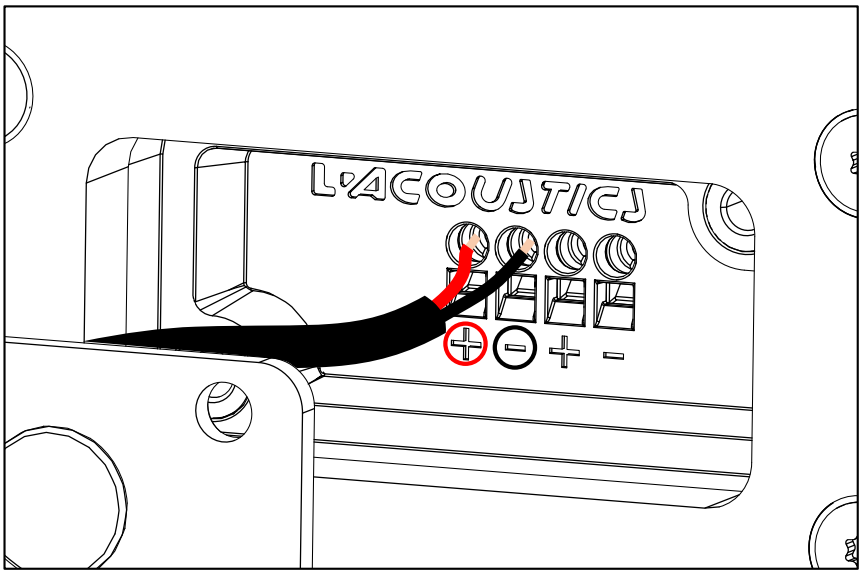

4. Secure the connector sealing plate to the enclosure.

Apply a torque of 1 N.m.

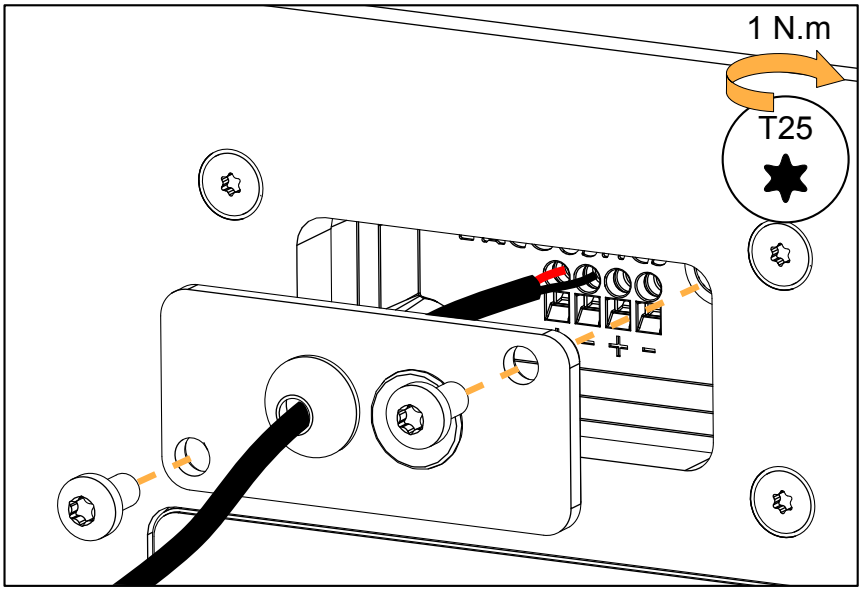

What to do next

To remove the cables, use the small tool to unlock the terminals and pull on the wires.

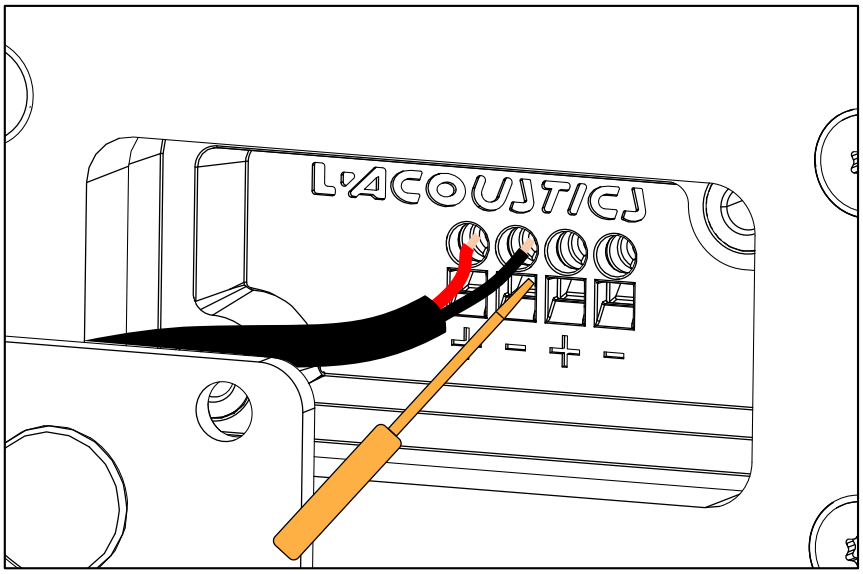

Corrective maintenance

Introduction

This section contains the following maintenance procedures:

SB10i

- D/R - Trapdoor (p.33)
- D/R - LF speaker (p.34)

For advanced maintenance, contact your L-Acoustics representative.

Tools and consumables

Before performing maintenance on this product, make sure all the tools listed are available. References are given for FACOM® products in this table. Other manufacturers can be used.

name	reference	distributor
set of 6-point 1/4" sockets *	RL.NANO1 / R.360NANO	FACOM
torque screwdriver (2 - 10 N.m) *	A.404	FACOM
flat tool	-	-

* included in the L-Acoustics Maintenance Toolcase.

Maintenance Toolcase

The Maintenance Toolcase is a carry-on suitcase that includes all the tools required to perform maintenance on L-Acoustics products. This toolcase is aimed at Certified Providers.

The Maintenance Toolcase uses a Peli™ 1510 Protector case that features three pre-cut layers of foam to safely fit the tools. The Maintenance Toolcase includes tools manufactured by FACOM®, Fluke®, Tohnichi, ABUS, and Würth.

All third-party trademarks, registered trademarks, or product names are the property of their respective owners.

SB10i

Exploded views

In order to operate, follow the order outlined here. Each assembly refers to the corresponding Disassembly/Reassembly (D/R) procedure and the necessary repair kit.

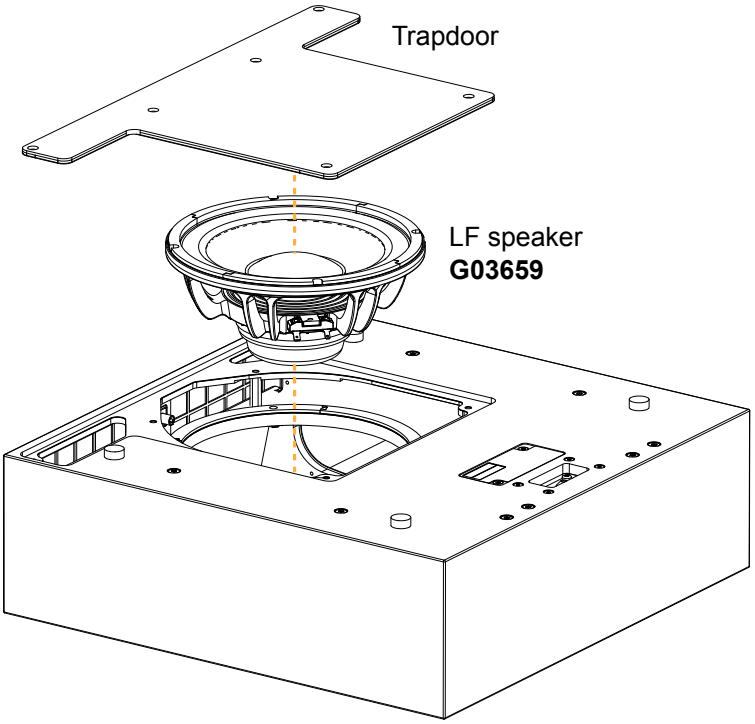

Disassembly and Reassembly procedures

D/R - Trapdoor

Tools

- torque screwdriver
- T25 Torx bit
- flat plastic tool

Repair kit

G03659

KR loudspeaker 10" SB10i

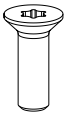

×4

S100086

M5×16 Torx

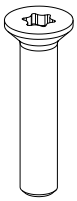

×2

S100033

M5×25 Torx

Prerequisite

Place SB10i upside-down on a flat surface.

Exploded view

For safety reasons, always use the new screws and spare parts provided in the KR.
If no new screws are available, use blue threadlocker.

Grill screws
The two S100033 screws also hold the grill. When the trapdoor is removed, the grill is not secured.

Use a flat plastic tool as a lever to remove the trapdoor.

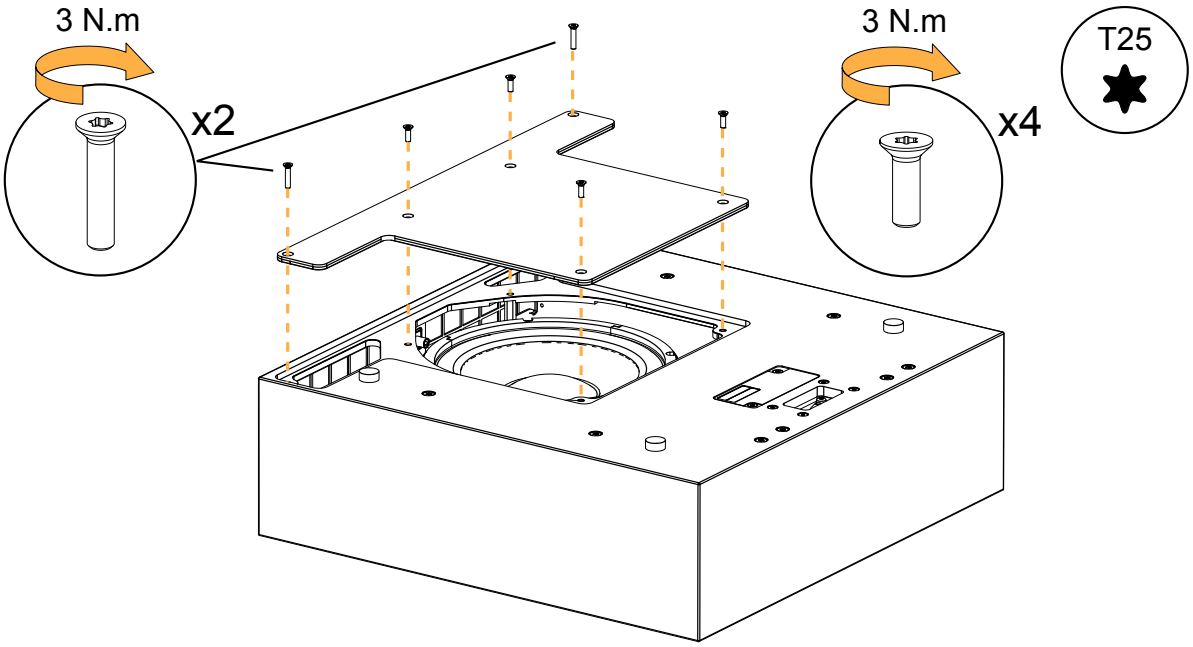

D/R - LF speaker

Tools

- torque screwdriver
- T25 Torx bit

Repair kit

G03659

KR loudspeaker 10" SB10i

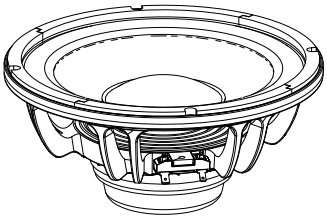

×1

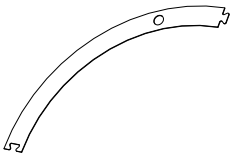

×4

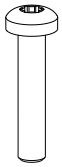

×4

18298	102325	S100228
10" LF speaker - 8 Ω	10" speaker gasket	M5x25 Torx

Prerequisite

Trapdoor removed. See D/R - Trapdoor (p.33).

Exploded view

For safety reasons, always use the new screws and spare parts provided in the KR.
If no new screws are available, use blue threadlocker.

Gradually tighten the screws following a star pattern.

If the speaker gasket is damaged, remove and replace it.

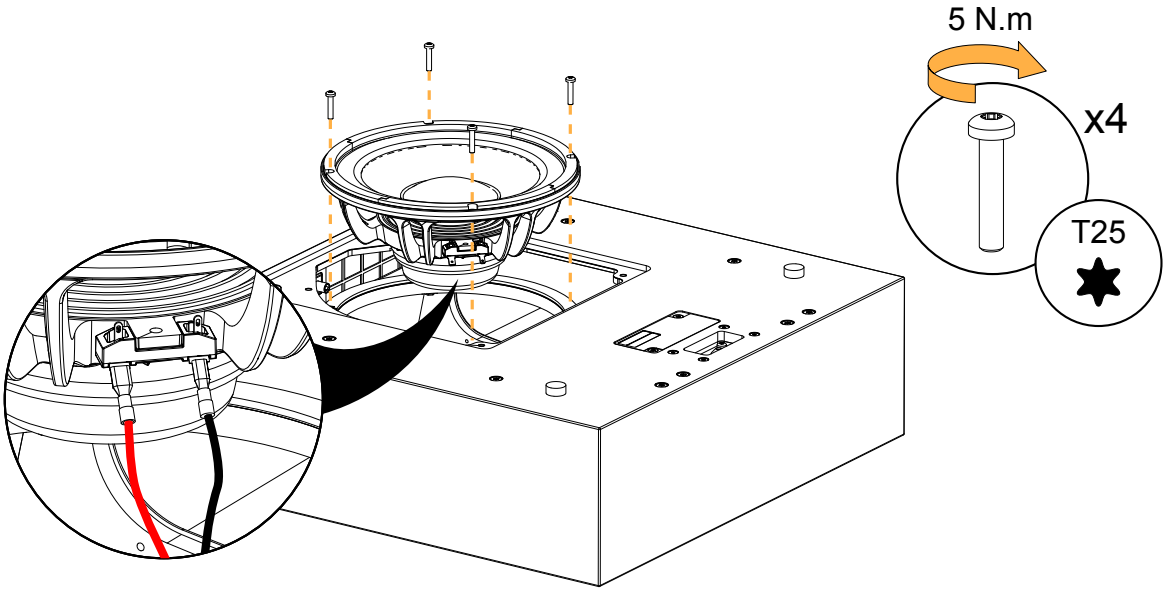

What to do next

Perform the Acoustical check (p.19) procedures.

Specifications

SB10i specifications

Description		Ultra-compact subwoofer: 1 × 10" (installation version), amplified by LA2Xi / LA4X / LA7.16i / LA12X		
		with [SB10_60]	with [SB10_100]	with [SB10_200]
Low frequency limit (-10 dB)		25 Hz	27 Hz	29 Hz
Maximum SPL[1]	with LA2Xi (bridge mode) / LA4X / LA7.16i / LA12X	119 dB	122 dB	124 dB
	with LA2Xi	119 dB	120 dB	122 dB
Nominal directivity (-6 dB)		standard configuration		
Transducers		1 × 10" cone driver		
Acoustical load		bass-reflex, L-Vents		
Nominal impedance		8 Ω		
Connectors		1 × 4-point terminal block with push-in connection		
Rigging and handling		12 M6 inserts for rigging accessories		
Weight (net)		14 kg / 31 lb		
Cabinet		premium grade Baltic birch plywood		
Front		coated steel grill		
		acoustically neutral 3D fabric		
Finish		dark grey brown Pantone 426 C		
		pure white RAL 9010		
		custom RAL code on special order		
IP		IP55		

[1] Peak level at 1 m under half space conditions using pink noise with crest factor 4 (preset specified in brackets).

SB10i dimensions

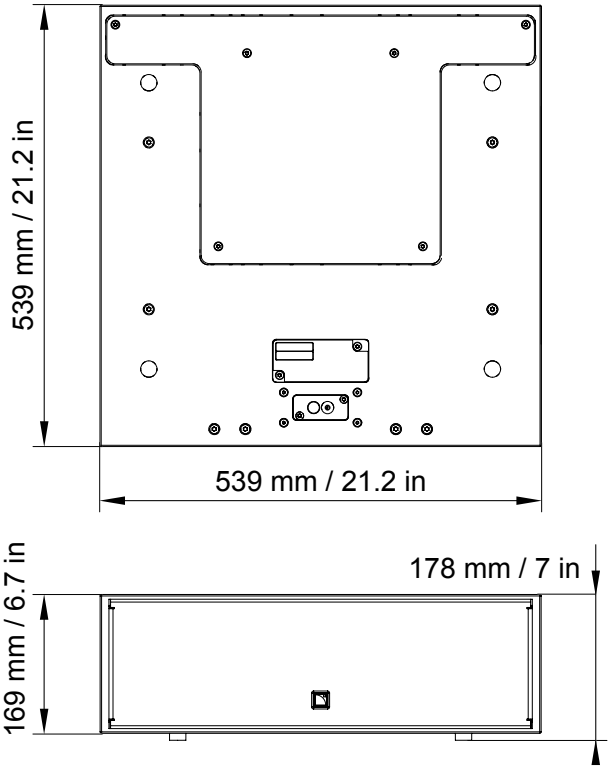

SB10i-onCW specifications

Description	On-wall or on-ceiling mounting accessory with silent blocks for SB10i
Weight (net)	1 kg / 2.2 lb
Material	high grade steel with anti-corrosion coating

SB10i-onCW dimensions

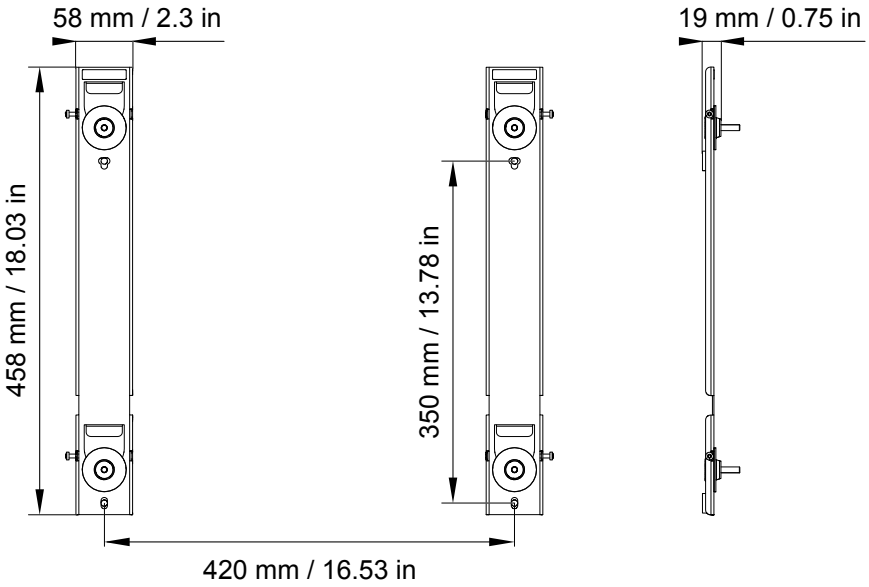

Recommendation for speaker cables

Follow the recommended maximum length for loudspeaker cables to ensure minimal SPL attenuation.

Cable quality and resistance

Only use high-quality fully insulated speaker cables made of stranded copper wire.

Use cables with a gauge offering low resistance per unit length and keep the cables as short as possible.

The table below provides the recommended maximum length for loudspeaker cables depending on the cable gauge and on the impedance load connected to the amplifier.

cable gauge			**recommended maximum length**					
			8 Ω load		**4 Ω load**		**2.7 Ω load**	
mm^2	SWG	AWG	m	ft	m	ft	m	ft
2.5	15	13	30	100	15	50	10	33
4	13	11	50	160	25	80	17	53
6	11	9	74	240	37	120	25	80

Use the more detailed L-Acoustics calculation tool to evaluate cable length and gauge based on the type and number of enclosures connected. The calculation tool is available on our website:

https://www.l-acoustics.com/installation-tools/

Specifications for custom rigging

Dimensions

Refer to SB10i dimensions (p.36).

Center of gravity

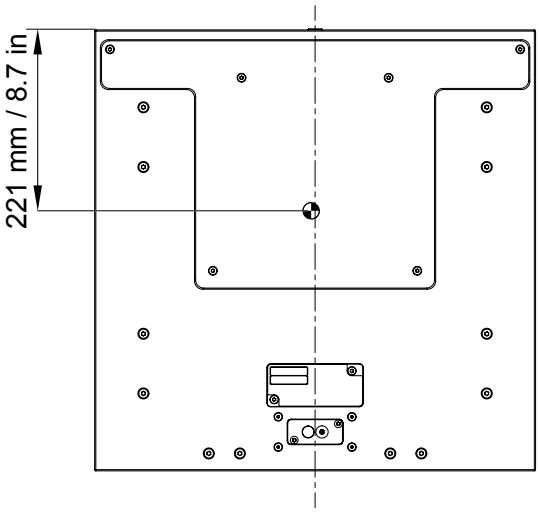

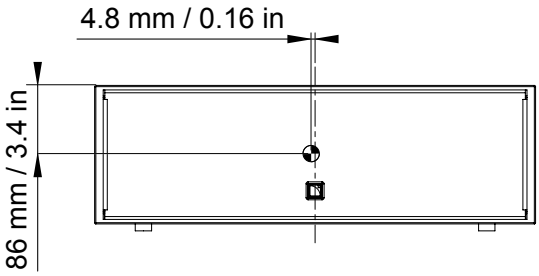

Weight

SB10i: 14 kg / 31 lb

Threaded inserts and screws

Use only rigging inserts to implement a custom rigging

Inserts marked with ○ can be used for rigging.

Inserts marked with ✕ must not be used for custom rigging (reserved for screen mounting, maintenance purposes, L-Acoustics accessories, etc.).

Grade of screws must be defined by a qualified person

Take into consideration the number of inserts used, weight and center of gravity of enclosure(s), and resulting action forces.

Prevent screws from loosening (threadlocker, spring washer...).

SB10i has **12 threaded M6 inserts** available for rigging.

Ultimate Tensile Strength	1160 N
Ultimate Shear Strength	3300 N
Recommended screw length *	min. 20 mm / 0.8 in
Recommended torque	5 N.m

* Recommended screw length for a metal sheet with a thickness of 3 mm / 0.1 in. Adapt the length to the custom rigging design.

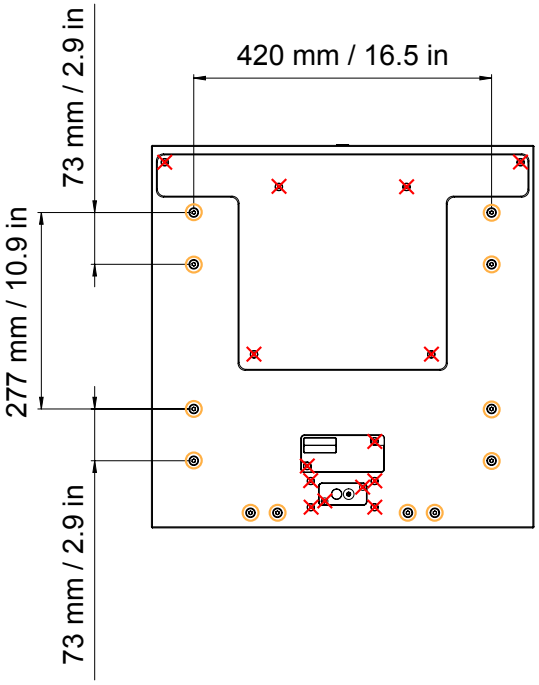
420 mm / 16.5 in
73 mm / 2.9 in
277 mm / 10.9 in
73 mm / 2.9 in

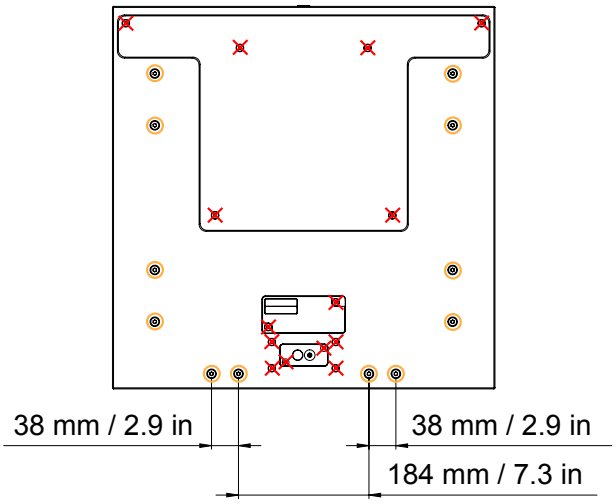
38 mm / 2.9 in
38 mm / 2.9 in
184 mm / 7.3 in

L-Acoustics
13 rue Levacher Cintrat - 91460 Marcoussis - France
+33 1 69 63 69 63 - info@l-acoustics.com
www.l-acoustics.com

L-ACOUSTICS
GROUP